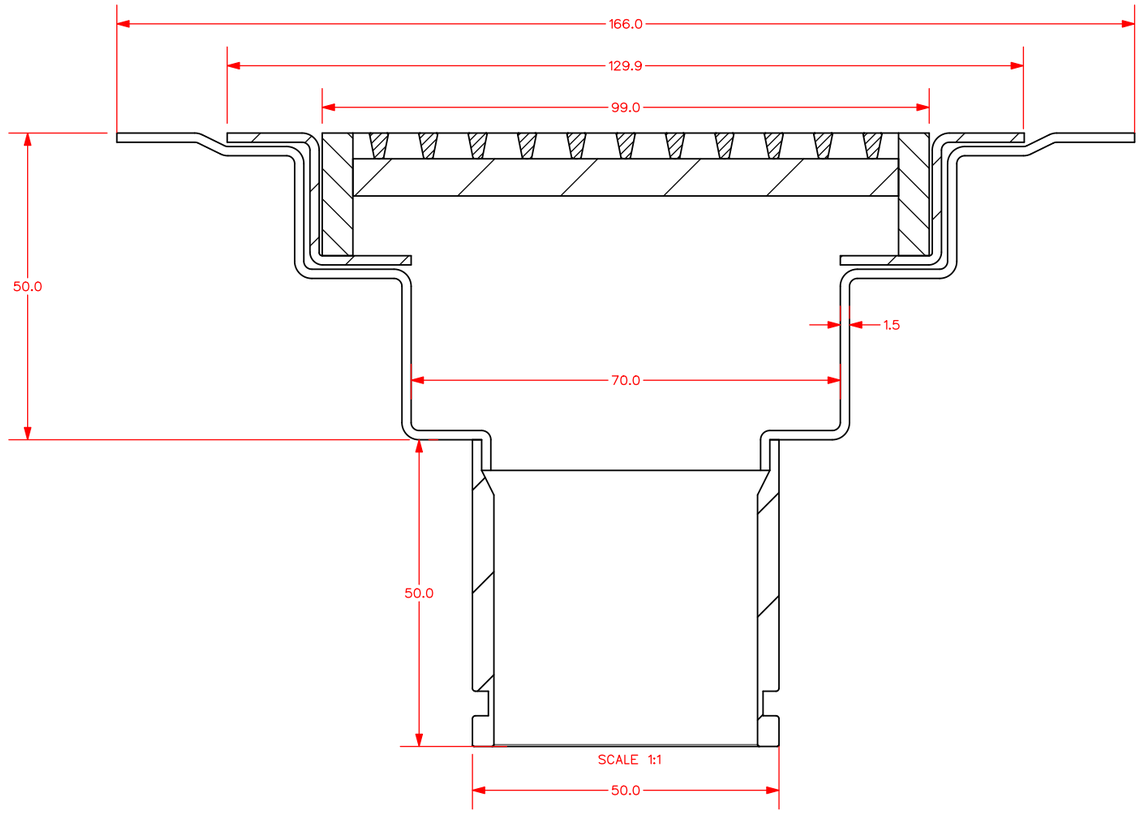

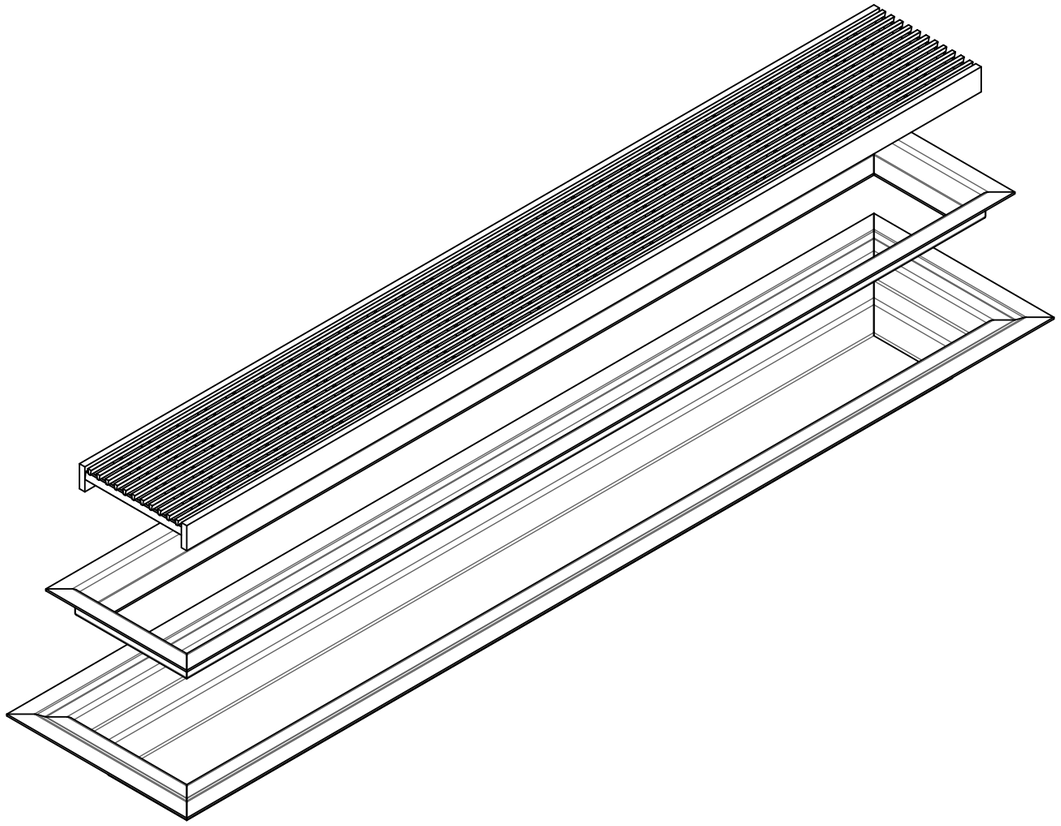

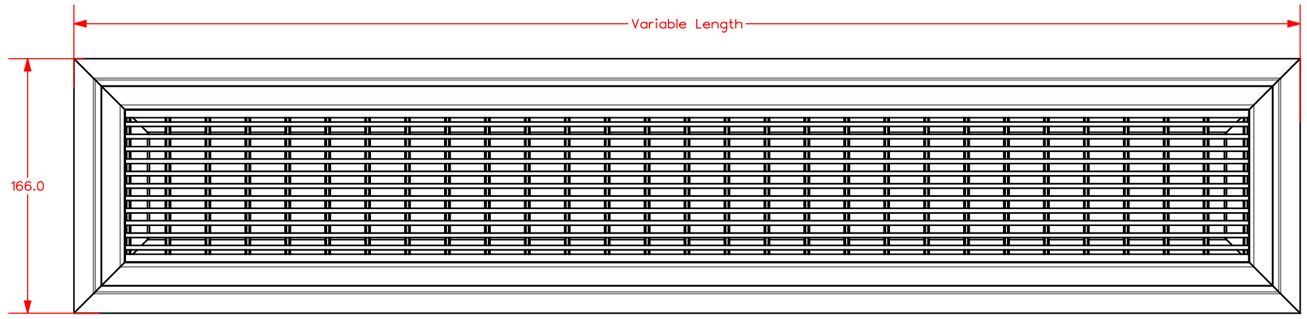

REVISIONS	BY	DATE

TOOL NUMBER	000
PART WEIGHT (grs)	000.0
FILE	S:/CAD Files/Vinyl Clamp Ch - Draft B.VX

DO NOT SCALE DRAWING

REQUESTED Adam J.	DATE 25.Oct.2011
DRAWN Eric I.	DATE 26.Oct.2011
APPROVED ----	DATE --.---.----
MATERIAL Stainless Steel t=1.5mm	
A3	UNITS = mm

ALLPROOF INDUSTRIES

TITLE Vinyl Clamping Channel

PART NUMBER n/a

SCALE 1:4 | SHEET 1 OF 1